Kleingebinderegale

Shelving with spill tray

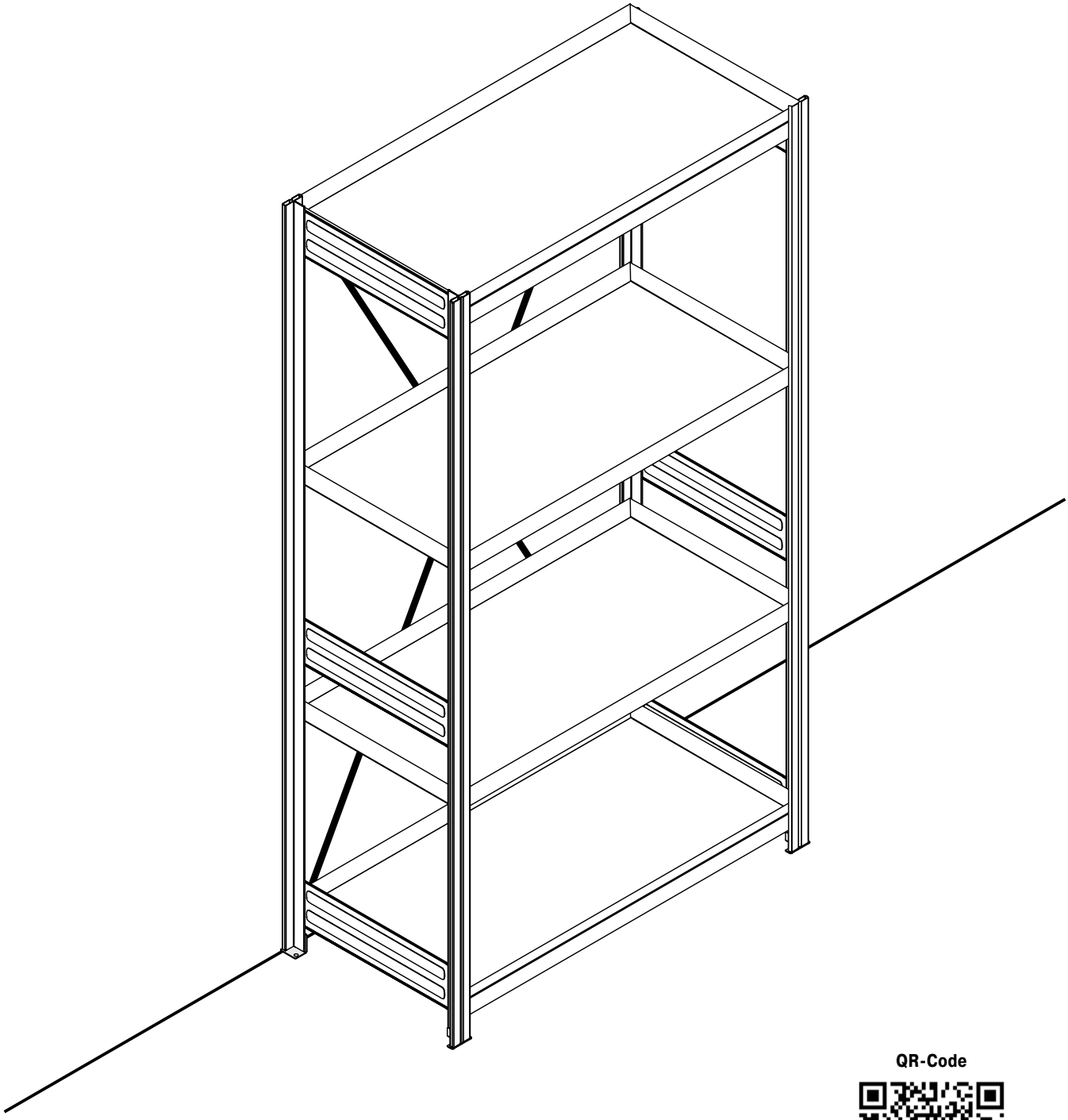

KLEINGEBINDEREGALE | SHELVING WITH SPILL TRAY

QR-Code

www.bito.com

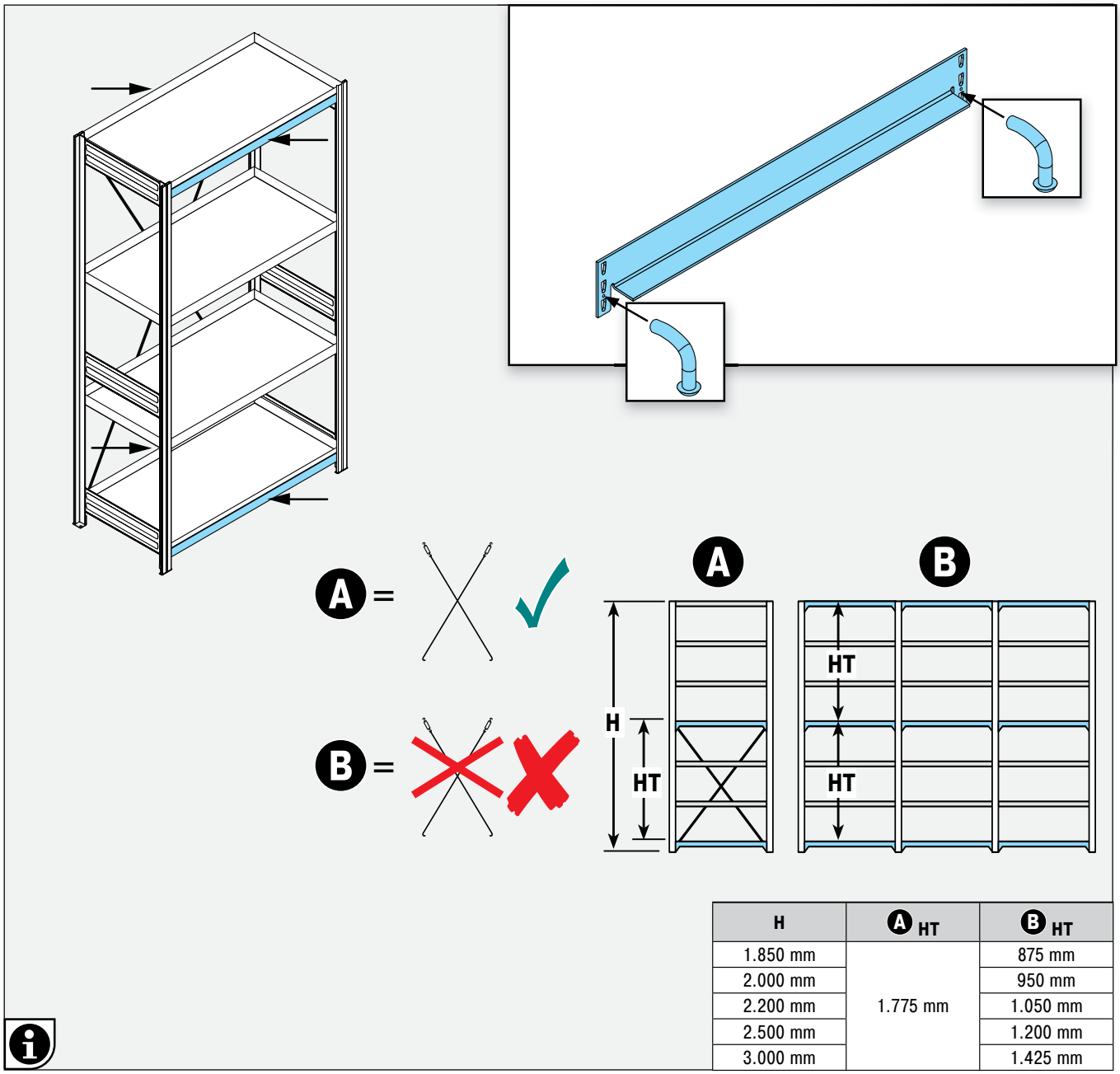

H	A HT	B HT
1.850 mm	1.775 mm	875 mm
2.000 mm		950 mm
2.200 mm		1.050 mm
2.500 mm		1.200 mm
3.000 mm		1.425 mm

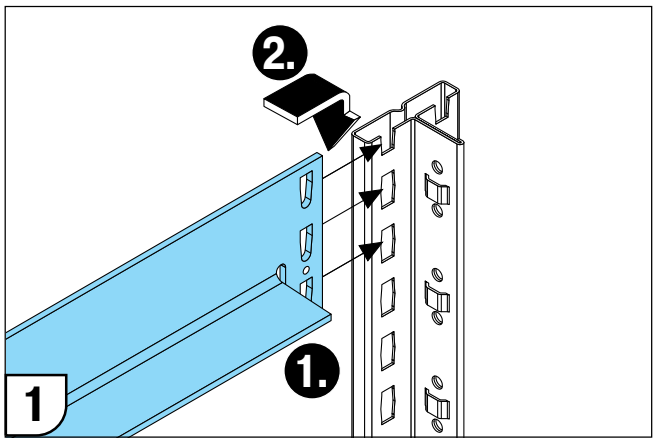

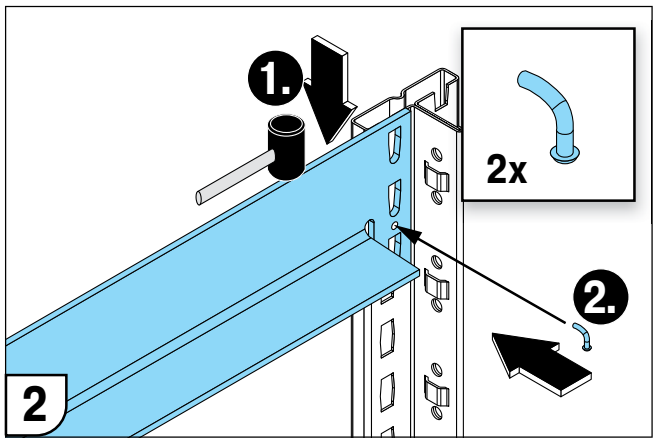

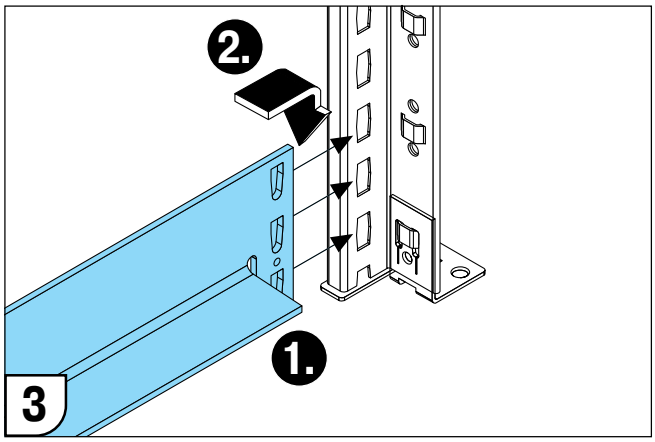
2.
1.
3

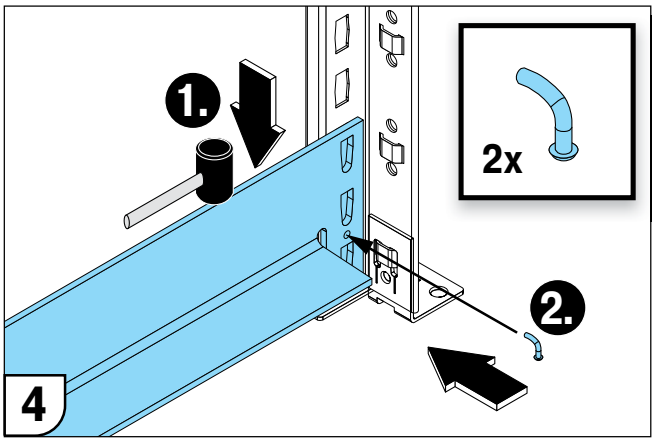
1.
2x
2.
4

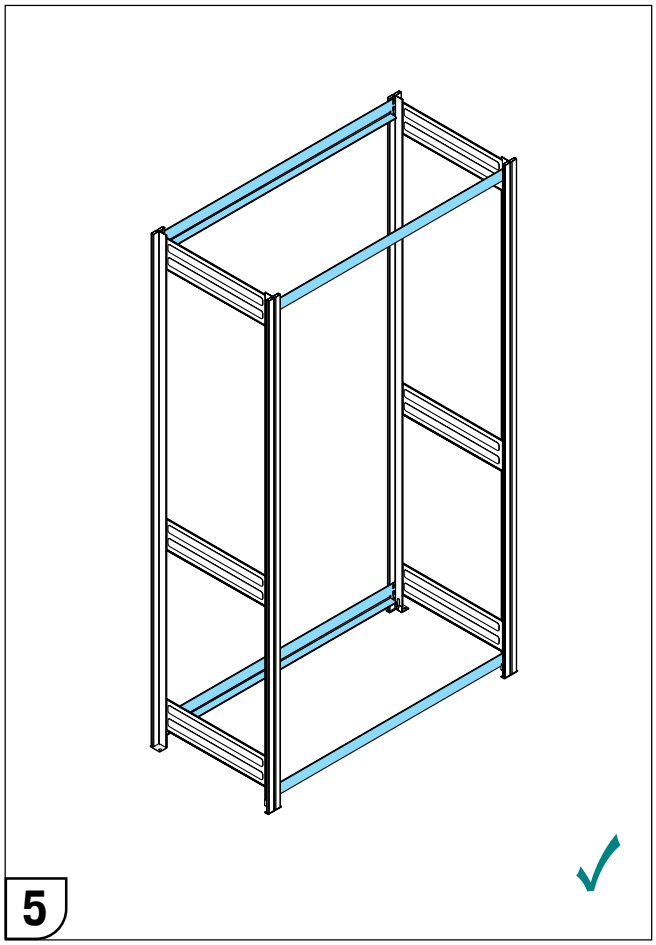
5

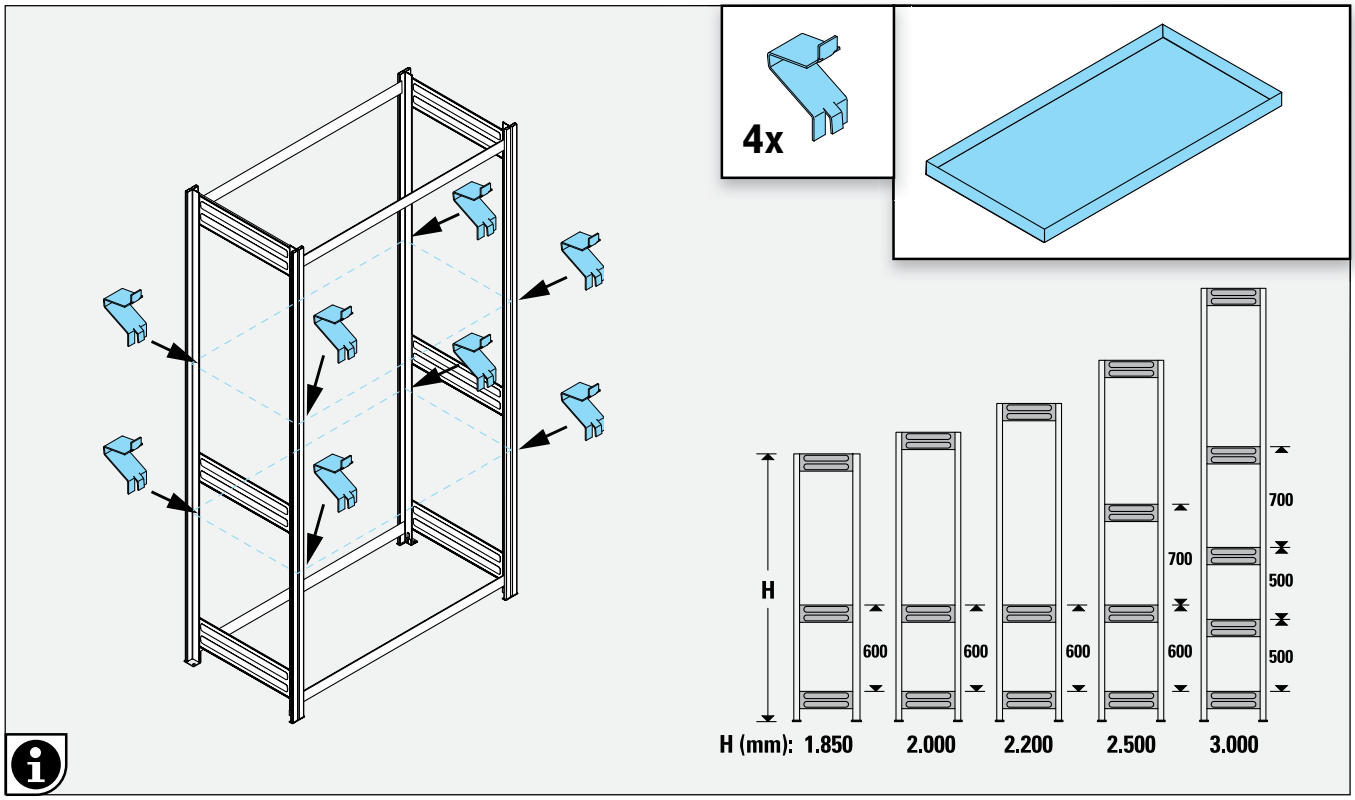
4x
H
600
700
500
H (mm): 1.850
2.000
2.200
2.500
3.000

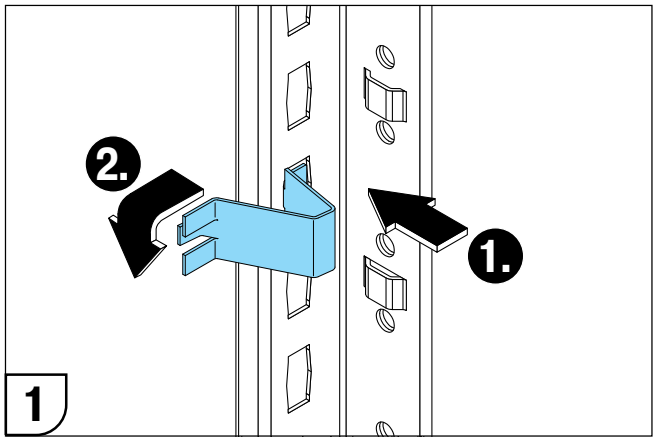
2.
1.
1

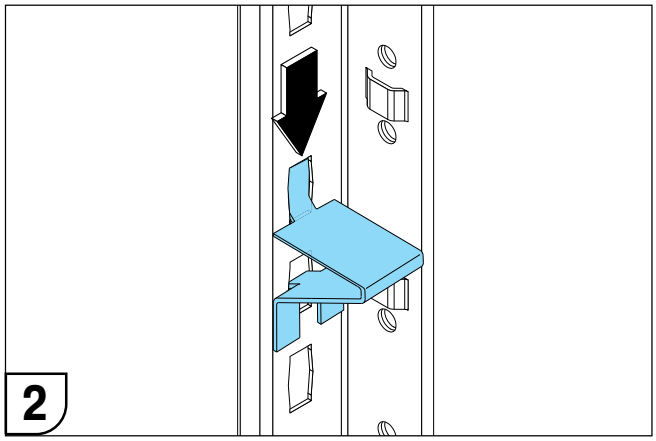
2

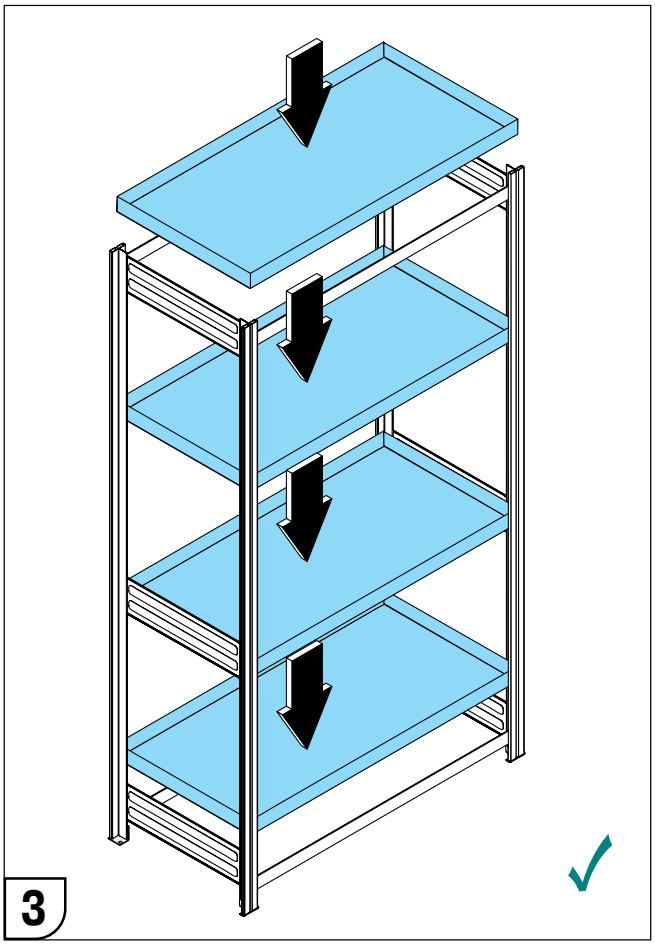
3

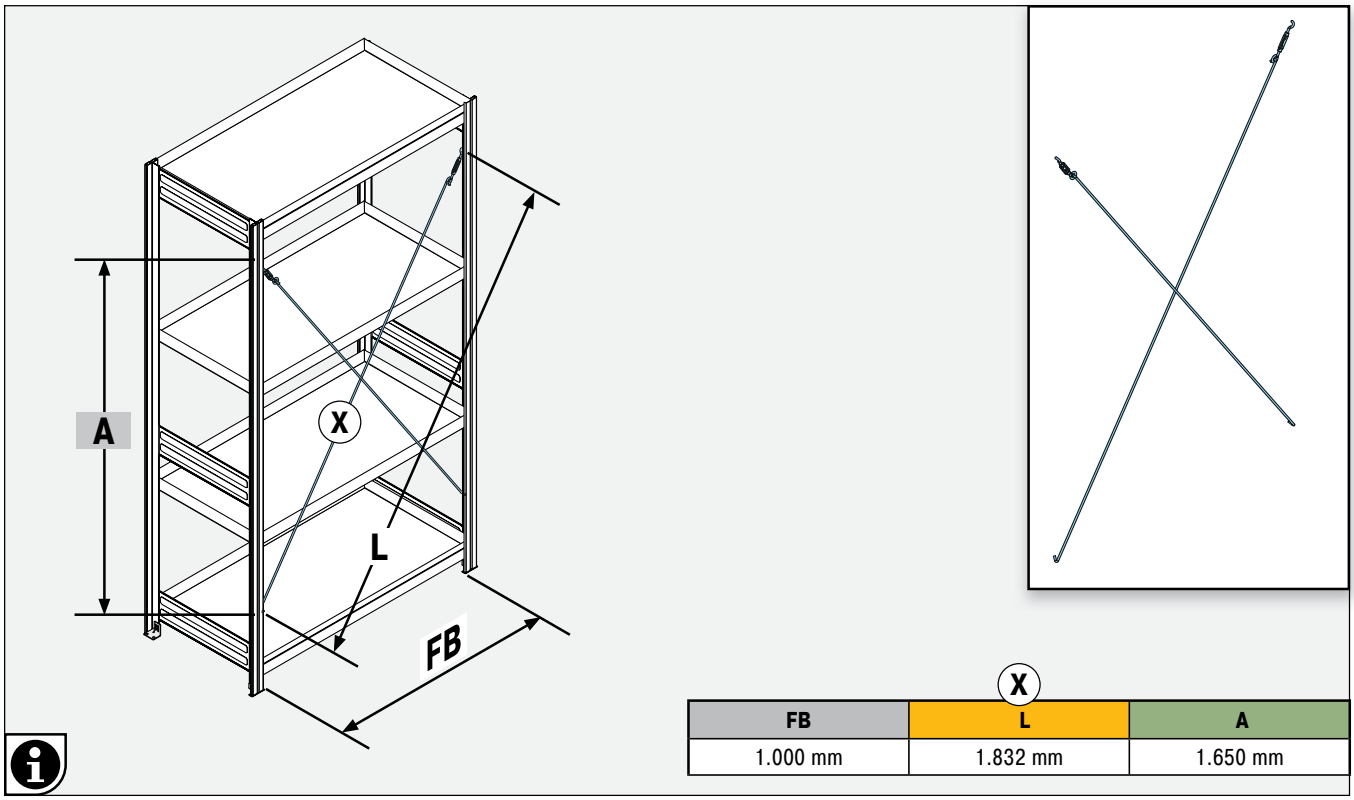

FB	L (X)	A
1.000 mm	1.832 mm	1.650 mm

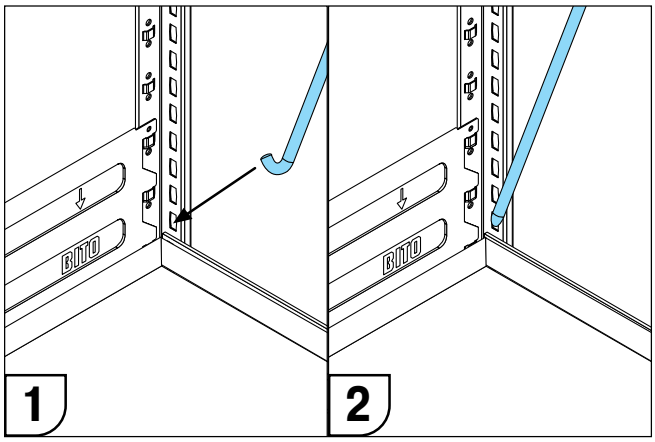

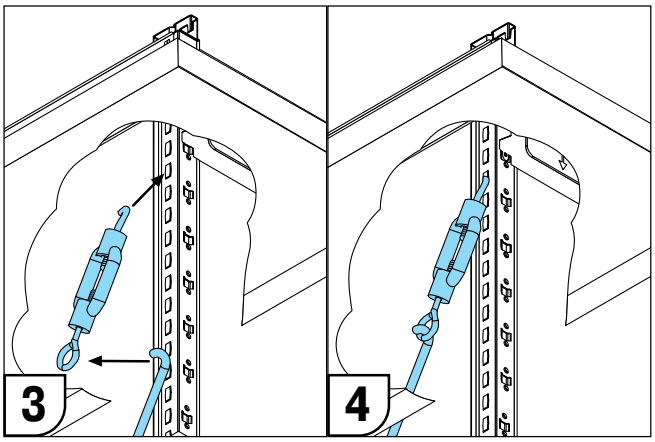

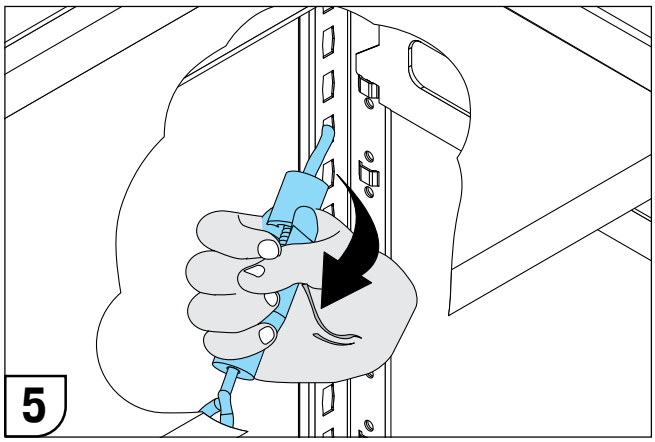

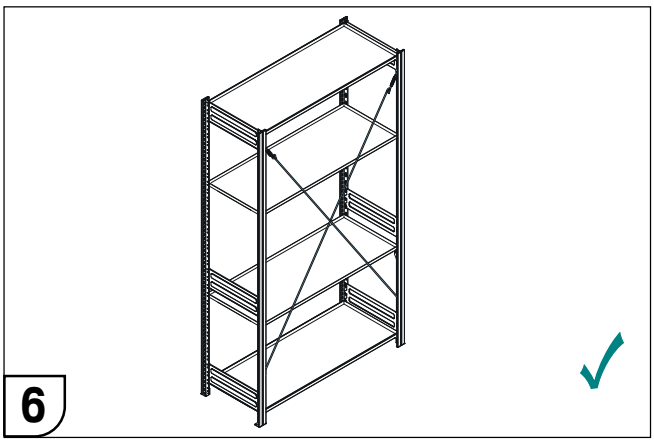

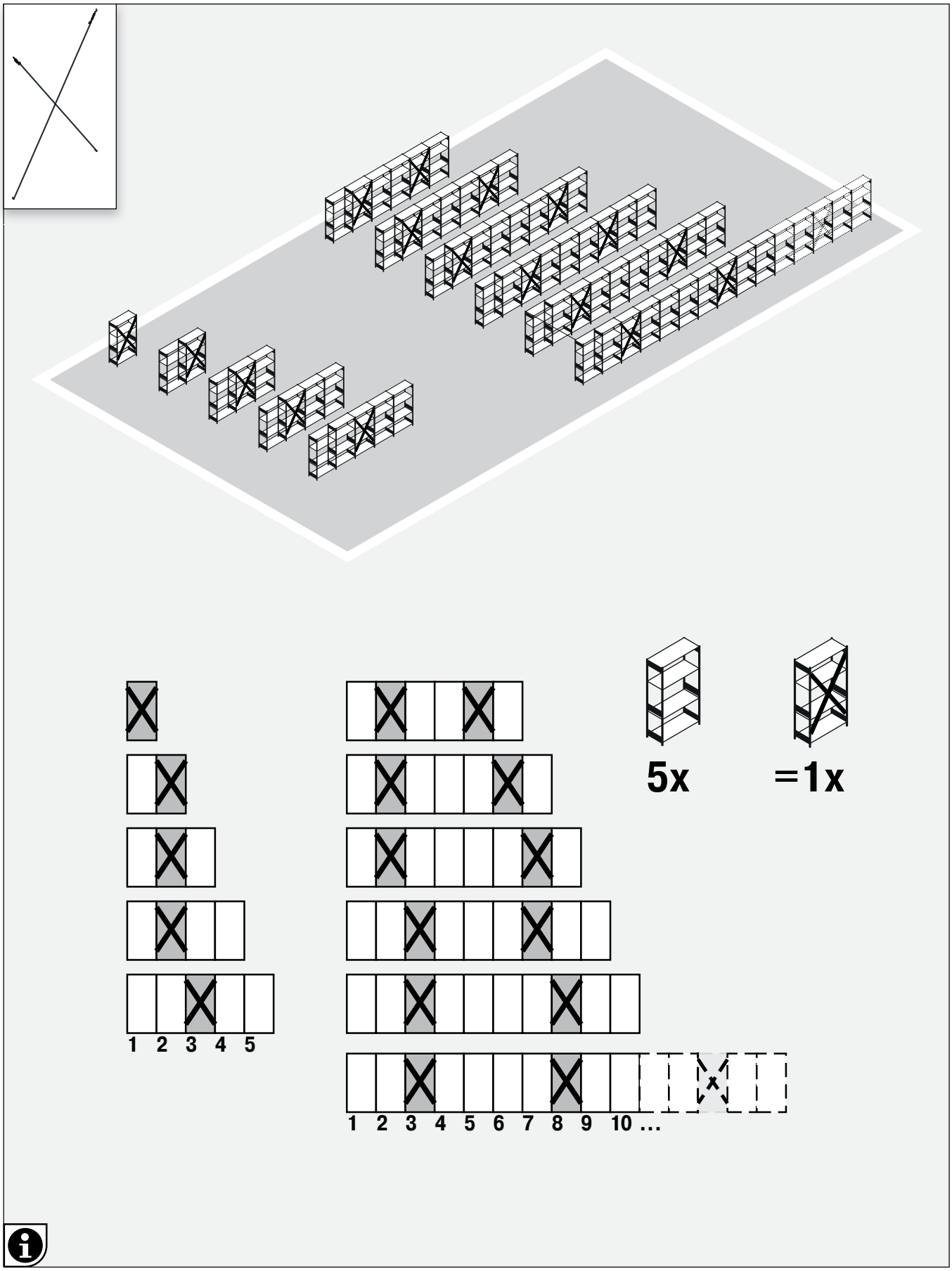
5x
=1x
1 2 3 4 5
1 2 3 4 5 6 7 8 9 10 ...

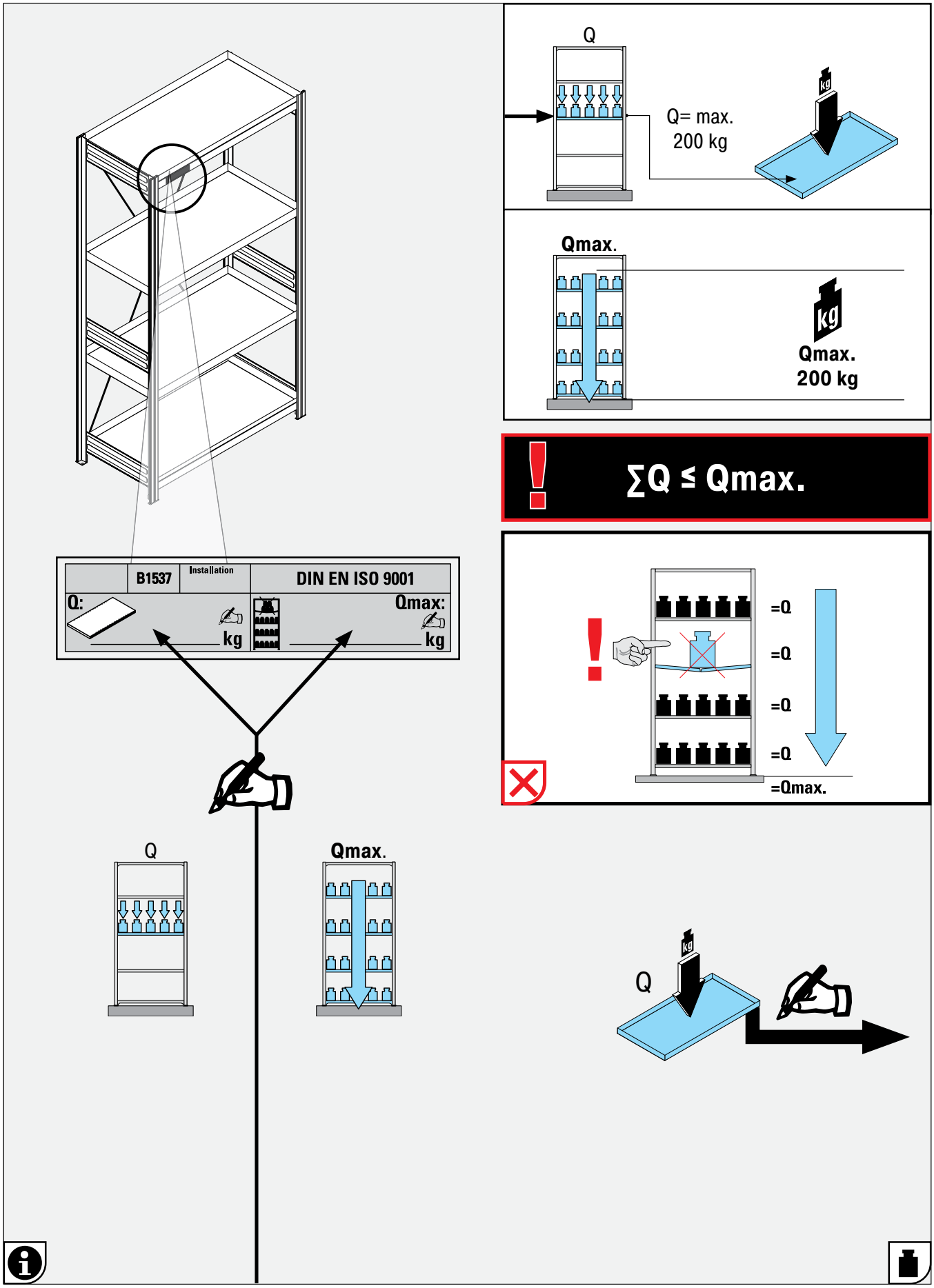
Q
Q= max.
200 kg
kg
Qmax.
Qmax.
200 kg
∑Q ≤ Qmax.
B1537
Installation
DIN EN ISO 9001
Q:
kg
Qmax:
kg
=Q
=Q
=Q
=Q
=Qmax.
Q
Qmax.
Q

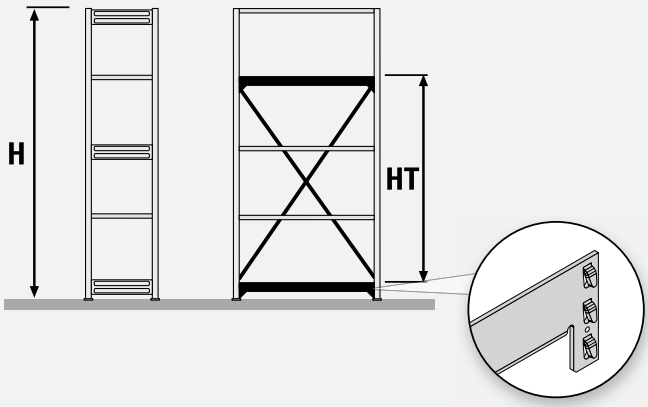

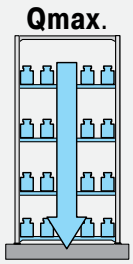

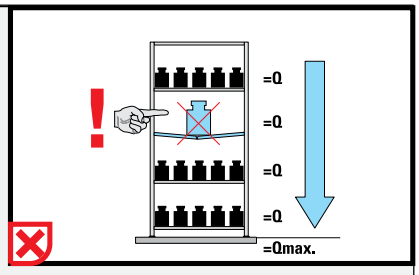

! ∑Q ≤ Qmax.

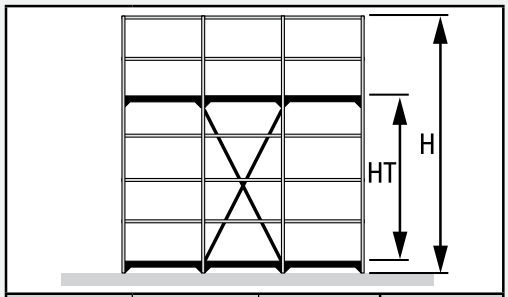

H	HT	Qmax.
1.850 mm	1.775 mm	1.300 kg
2.000 mm		1.300 kg
2.200 mm		1.025 kg
2.500 mm		1.430 kg
3.000 mm		1.600 kg

Qmax.

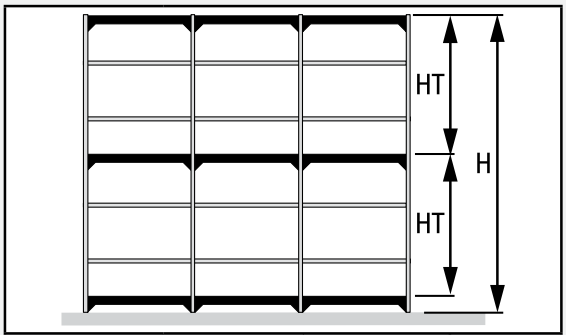

H	HT	Qmax.
1.850 mm	875 mm	1.300 kg
2.000 mm	950 mm	1.300 kg
2.200 mm	1.050 mm	1.025 kg
2.500 mm	1.200 mm	1.350 kg
3.000 mm	1.425 mm	950 kg

Qmax.

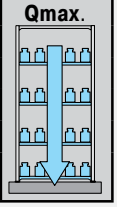

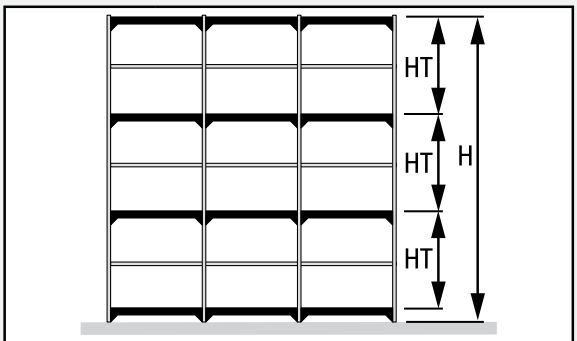

H	HT	Qmax.
1.850 mm	-	-
2.000 mm	-	-
2.200 mm	-	-
2.500 mm	800 mm	1.430 kg
3.000 mm	950 mm	1.450 kg
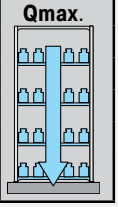
Qmax.